Catalog for GEARBOX

ZF5S-150GP ,12JS200T Parts Catalog

Powered by Hubei Dong Runze Special Vehicle Equipment Co., Ltd www.truckinchina.com

GEARBOX ZF5S-150GP

ZF5S-150GP (2159003019) Catalog, Transmission housing, QIJIANG Transmission

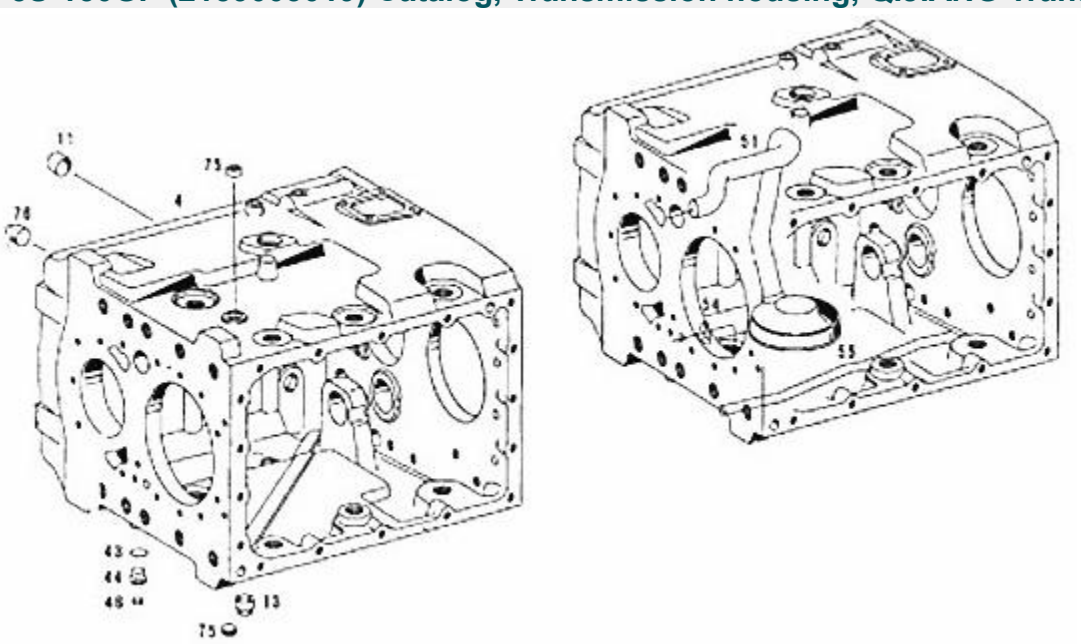

Transmission housing			
QIJIANG Transmission Gearbox			
serial	number	name	quantity
4	1269301125	Transmission housing	1
11	736301022	Hexagon head conical plug 24 * 1.5	4
13	736305016	Oil drain plug assembly	1
43	634801044	Gasket ring A16 * 20	2
44	636302016	inner hexagonal bolts M16 * 1.5	2
46	630361103	Blocking cover	1
51	501202407	Suction tube assembly	1
54	630531387	Suction tube locking plate	1
55	1269301124	Injector tube	1
75	636301048	Hexagon bolt M18 * 1.5	2
76	736303005	Plugs	1

ZF5S-150GP (2159003019) Catalog, Front cover, QIJIANG Transmission

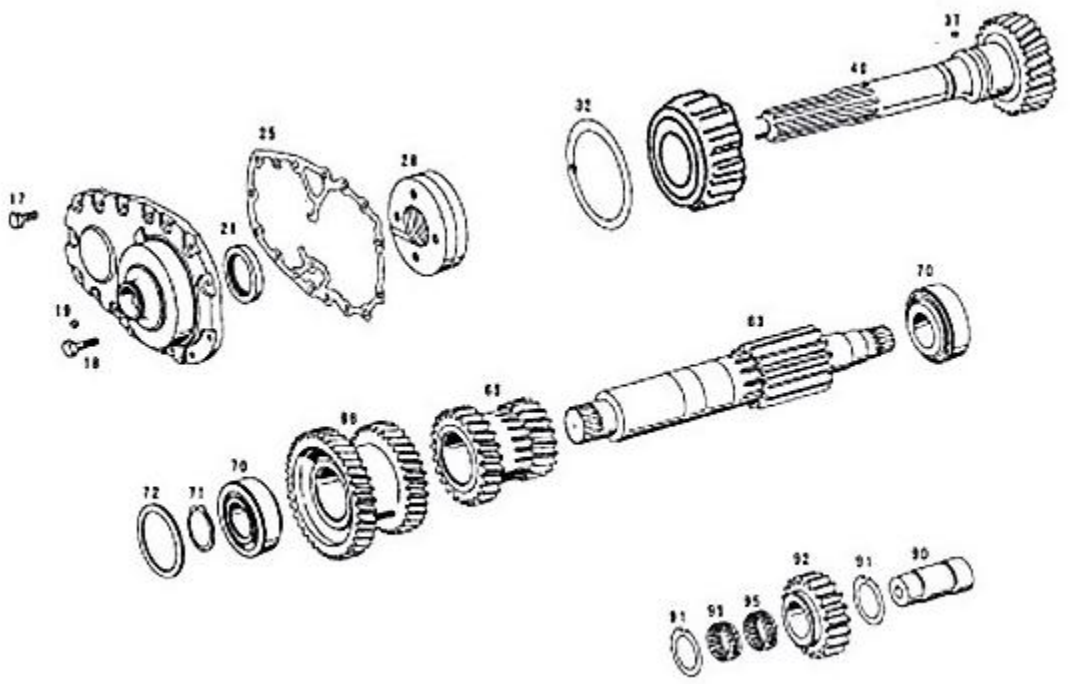

Front cover, first shaft, middle shaft, reverse gear shaft assembly			
QIJIANG Transmission Gearbox			
serial	number	name	quantity
1	2159302007	Front cover	1
17	636015110	Bolt M10 * 20 T49 N.M	15
18	636015120	Bolts M10 * 25 T49 N.M	1
19	630310111	Front cover plugging cover	1
21	734310110	First shaft oil seal	1
25	1269302161	Liner	1
28	1269202104	Pump assembly	1
32	730102503	Adjusting pads A0.50	1
	730102504	Adjusting pads A0.60	
	730102505	Adjusting pads A0.70	
	730103804	Adjusting pads A0.80	
35	7217	Tapered roller bearings 85 * 150 * 30.5	1
37	635470012	Cylindrical pin 7 * 7	1
40	2159302006	The first shaft	1
63	1292303004	Middle shaft	1
65	2159303002	First & second gear teeth of middle shaft	1
66	2159303003	Third & forth gear teeth of middle shaft	1
70	735370011	Roller bearings 50.8 * 100 * 35	2
71	630501145	Elastic ring gear shaft 50 * 2.1	1
	630501146	Elastic ring gear shaft 50 * 2.2	
	630501147	Elastic ring gear shaft 50 * 2.3	
	630501148	Elastic ring gear shaft 50 * 2.4	
	630501064	Elastic ring gear shaft 50 * 2.5	
	630501118	Elastic ring gear shaft 50 * 2.6	
	630501116	Elastic ring gear shaft 50 * 2.7	
	630501114	Elastic ring gear shaft 50 * 2.8	
	630501112	Elastic ring gear shaft 50 * 2.9	
	630501065	Elastic ring gear shaft 50 * 3.0	
	630501150	Elastic ring gear shaft 50 * 3.1	
	630501151	Elastic ring gear shaft 50 * 3.2	

Front cover, first shaft, middle shaft, reverse gear shaft assembly			
72	730102075	Adjusting pads A1.85	1
	730102074	Adjusting pads A1.90	
	730102073	Adjusting pads A1.95	
	730102072	Adjusting pads A2.00	
	730102071	Adjusting pads A2.05	
	730102070	Adjusting pads A2.10	
	730102069	Adjusting pads A2.15	
	730102068	Adjusting pads A2.20	
	730102067	Adjusting pads A2.25	
	730102066	Adjusting pads A2.30	
	730102065	Adjusting pads A2.35	
	730102064	Adjusting pads A2.40	
	730102063	Adjusting pads A2.45	
	730102062	Adjusting pads A2.50	
	730102061	Adjusting pads A2.55	
	730102060	Adjusting pads A2.60	
	730102106	Adjusting pads A2.65	
	730102105	Adjusting pads A2.70	
	730102104	Adjusting pads A2.75	
	730102103	Adjusting pads A2.80	
	730102102	Adjusting pads A2.85	
	730102101	Adjusting pads A2.90	
	730102100	Adjusting pads A2.95	
	730102099	Adjusting pads A3.00	
	730102098	Adjusting pads A3.05	
90	1269305003	Reverse shaft	1
91	730150064	Reverse gear gasket	2
92	1292305002	Reverse gear	1
95	735320492	Reverse needle bearing 45 * 53 * 21	2

ZF5S-150GP (2159003019) Catalog, Second shaft assey, QIJIANG Transmission

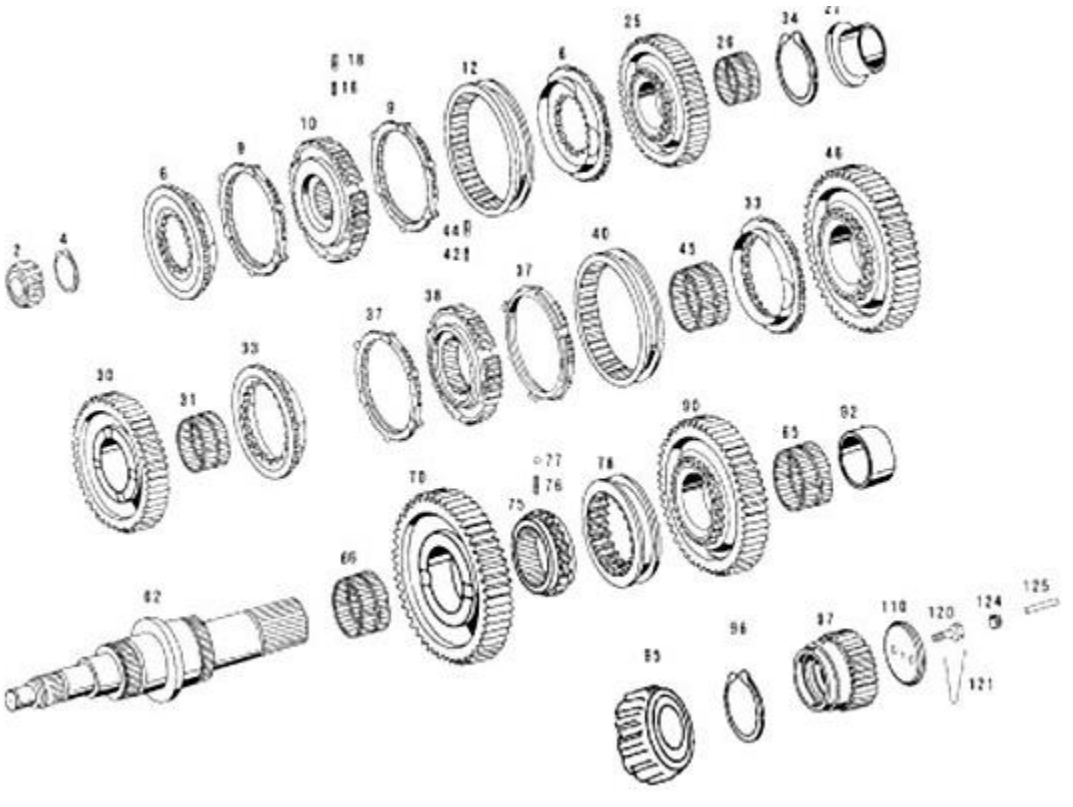

Second shaft assey			
QIJIANG Transmission Gearbox			
serial	number	name	quantity
2	570304002	Cylindrical Roller Bearings	1
4	630501145	Elastic ring 30 * 2.1	1
	630501146	Elastic ring 30 * 2.2	
	630501147	Elastic ring 30 * 2.3	
	630501148	Elastic ring 30 * 2.4	
	630501064	Elastic ring 30 * 2.5	
	630501118	Elastic ring 30 * 2.6	
6	1310302045	Three fourth gear synchronization cone hub	1
9	1268304594	Three fourth gear synchronizer ring	2
10	1310304158	Three fourth gear synchronization Adapters	1
12	1310304195	Synchronization sliding sleeve	1
16	1311304021	Pushing block spring	3
18	1311304020	Synchronous pushing block	3
25	2159304005	Second shaft third gear teeth	1
26	735320499	Third gear teeth needle bearing 62 * 70 * 40	1
27	2159304010	Second gear teeth bearing seat ring	1
30	2159304004	Second shaft second gear	1
31	K80*88*40	Second gear teeth Needle Roller Bearings	1
33	1312304027	First & second gear synchronizer cone hub	2
34	630501046	Elastic ring 75 * 2.5	1
	630501199	Elastic ring 75 * 2.4	
	630501198	Elastic ring 75 * 2.3	
37	1297304402	Synchronizer ring	4
38	2159304011	First & second gear synchronization Adapters	1
40	1312302057	First & second gear synchronizer sliding sleeve	1
42	1311304021	Pushing block spring	3
44	1311304020	Synchronous pushing block	3
45	735320401	First gear teeth needle bearing 82 * 90 * 50	1
46	2159304003	Second shaft first gear teeth	1
62	2159304001	Second shaft	1
65	K80*88*40	Slow speed gear needle roller bearings	1
66	K80*88*35	Reverse gear needle roller bearings	1
70	2159304014	Second slow gear shaft	1
75	2159304015	Slow reverse gear engaged gear	1
76	732040497	Clutch positioning spring	3
77	635460010	Steel ball	3
78	2159304017	Slow reverse clutch	1
90	2159304016	Second shaft reverse gear	1
92	2159304009	Reverse gear bearing seat ring	1
95	2159304013	Tapered Roller Bearings	1
96	630501046	Elastic ring 75 * 2.5	1
	630501199	Elastic ring 75 * 2.4	
	630501198	Elastic ring 75 * 2.3	
	630501163	Elastic ring 75 * 2.2	
97	1286304022	The sun wheel	1

Second shaft assey			
110	1269304070	Second shaft retaining plate	1
120	636015195	Bolt	2
121	666890019	Steel Lock line	1
125	730061842	Second shaft tube	1
	2159304012	Tube sleeve	1

ZF5S-150GP (2159003019) Catalog, Shift fork, QIJIANG Gearbox

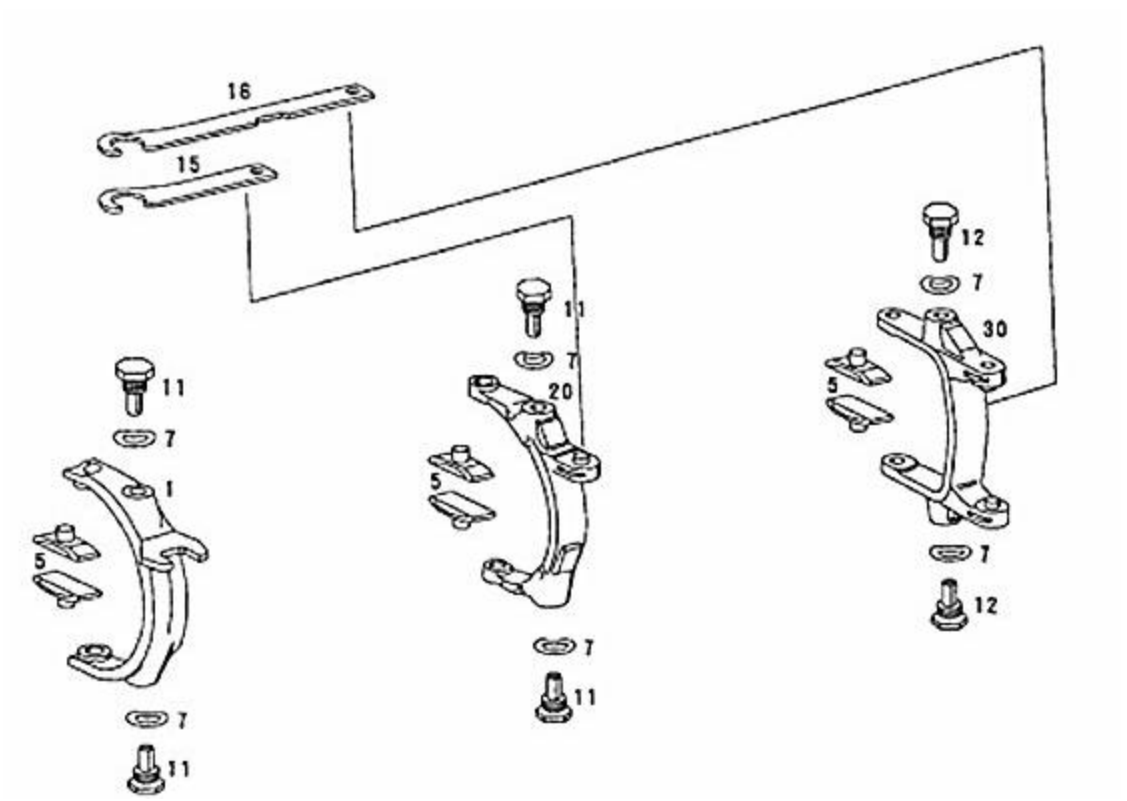

Shift fork			
QIJIANG Transmission Gearbox			
serial	number	name	quantity
1	1250306263	Third & fourth gear shift fork	1
5	115306006	Shifting block	6
7	730300005	Wave spring washer	4
11	1240306244	Fork support pins	4
12	1252306077	Fork support pins	2
15	1292306002	First & second gear shift lever	1
16	1251306064	Slow reverse shift lever	1
20	115206006	First & second gear shifting fork assembly	1
30	2159206001	Slow reverse fork assembly	1

ZF5S-150GP (2159003019) Catalog, Transmission cover, QIJIANG Gearbox

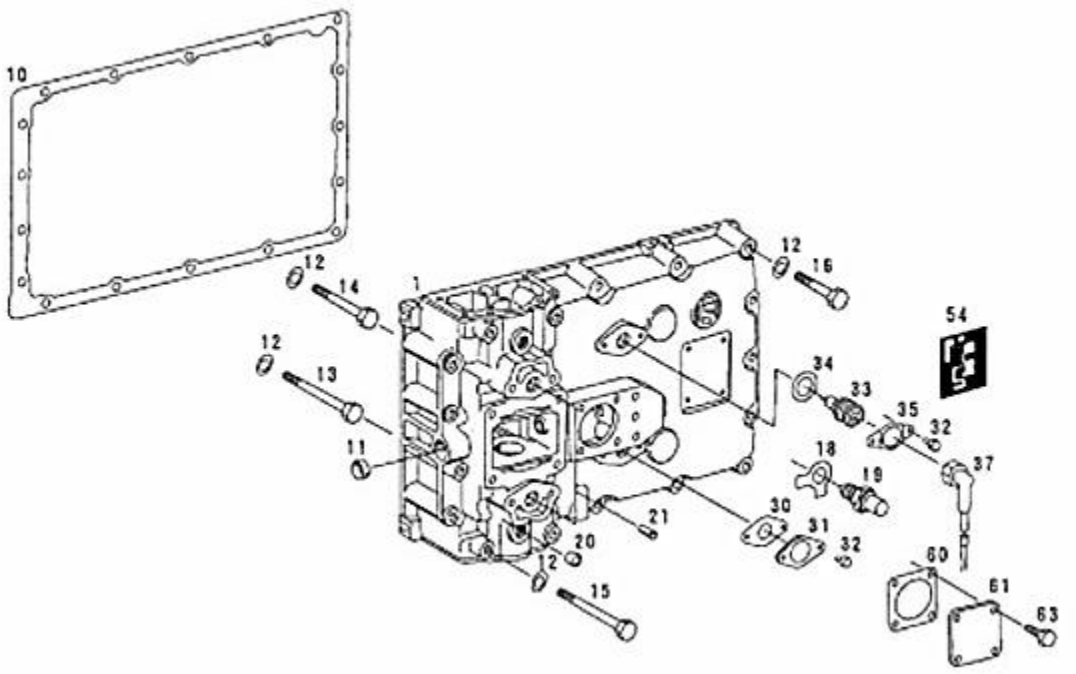

Transmission cover			
QIJIANG Transmission Gearbox			
serial	number	name	quantity
1	1269307484	Transmission cover	1
10	1269307026	Transmission cover gasket	1
11	630361050	Plugging cover	1
12	630302091	Wave spring washer	17
13	636010199	Bolt M10 * 105	1
14	636010190	Bolts M10 * 90	3
15	636010200	Bolt M10 * 110	4
16	636010176	Bolts M10 * 65	9
18	630603010	Binaural washers 17GB855-78	1
19	1250207252	Reverse turbocharger 120N	1
20	636301041	Hexagon bolt M16 * 1.5	1
21	730361073	Blocking cover	2
30	1203307289	Small cover gasket	1
31	1249301040	Small cover	1
32	636015020	Bolt M5 * 12	4
33	501203944	Reverse signal switch	1
34	501309183	Gasket ring	1
35	1240307441	Reverse switch plate	1
54	80307005	Nameplate	1
60	1269307200	Side cover gasket	1
61	1283307003	Fang Cover	1
63	636015278	Side cover bolt M8 * 16	4
87	501307450	Neutral signal switch	1

ZF5S-150GP (2159003019) Catalog, Shifting mechanism, QIJIANG Gearbox

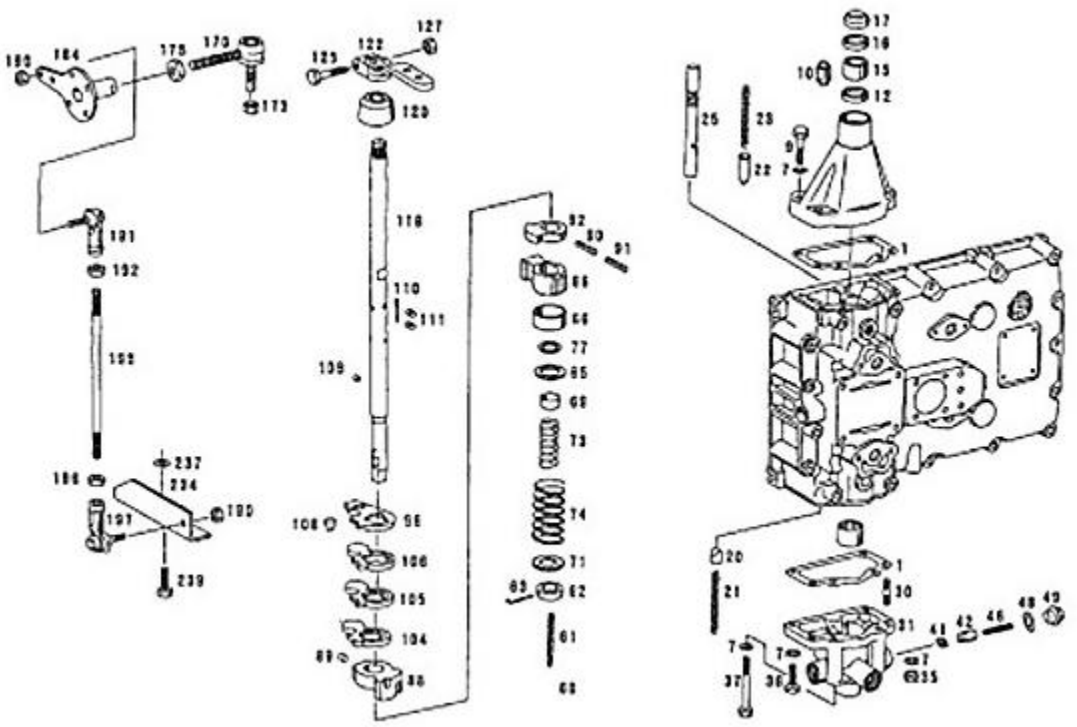

Shifting mechanism			
QIJIANG Transmission Gearbox			
serial	number	name	quantity
1	1252307060	Liner	2
3	1269307508	Lock housing	1
7	630302090	Wave spring washer B8	8
9	636010079	Bolt	4
10	732612004	Vent plug M8 * 28	1
12	634300020	Shift shaft inside the seal	1
14	635303053	Needle roller bearings	1
15	730260330	Shift shaft sleeve	1
16	634300302	Shift shaft seal 25 * 35 * 7 B	1
17	634307367	Dust seal 25 * 35 * 7/10	1
20	1250307601	Self-locking pin	1
21	732040554	Self-locking spring	1
22	1272307023	Slow reverse self-locking pin	1
23	732041244	Self-locking pin spring	1
25	1269307424	Interlock shaft	1
30	636604041	Bolt	2
31	1269307507	Under cover	1
35	637006018	Screw nut	2
36	636010066	Bolt	1
37	636010109	Bolt	2
41	501203518	Roller assembly	4
42	1269307480	Lock wheel frame	4
46	732040985	Big Spring	4
48	634801173	Gasket	4
49	736304091	Hexagonal head screw plug	4
60	731201333	Pressurized spring guide rod	1
61	732040334	Reverse pressurized spring	1
62	730062160	Return spring retainer	1
63	631329054	Spring cylindrical pin 5 * 32	1

Shifting mechanism			
65	730003373	Return spring inner gear	1
66	730062273	Big return spring positioned spacer	1
69	732062276	Small return spring positioned seat	1
71	730104083	Return spring outer gear	1
73	732040213	Big spring return	1
77	730002980	Retaining ring 1.5	1
86	115307001	Fan-shaped self-locking block	1
88	1269307367	Control air bumps	2
89	1238306065	Set screws	1
90	631329072	Spring cylindrical pin 6 * 40	1
91	631329145	Spring cylindrical pin 3.5 * 40	1
92	1240307374	Interlock shaft shifting block	1
96	1269307428	Slow reverse shift linkage plate	1
104	1269307455	Third & forth gear shifting plate	1
105	1269307457	First & second gear shifting plate	1
106	1272307025	Slow reverse shifting plate	1
108	1272307024	Shift linkage pin board	1
109	735470007	Drive pin	1
110	635490006	Needle A3 * 23.8	2
111	1269307463	Shift drive pin	4
116	1269307509	Shift shaft	1
120	1238307411	Dust cover	1
122	1250307666	Gearshift rocker	1
125	636010159	Bolts M10 * 40	1
127	637006102	Rocker nut M10	1
170	501204714	Arm ball joint	1
173	637011532	Arm ball joint nut M10 * 1	1
175	637006034	Arm ball joint nut M14 * 1.5	1
184	1240204072	Coupling plate assembly	1
190	637011527	Bracket ball joint nut M10	1
191	732107019	Support rod ball joint	1
192	637006091	Support rod nut (left) M12	1
195	736620052	Support rod	1
196	637006027	Support rod nut	1
197	732107018	Support rod ball joint	1
234	1283307007	Stand	2
237	630001075	Washer 8.4	1
239	636010072	Bracket bolts M8 * 35	1

SHIFTING VALVE AND AIR TUBE, 5S-150GP

图7

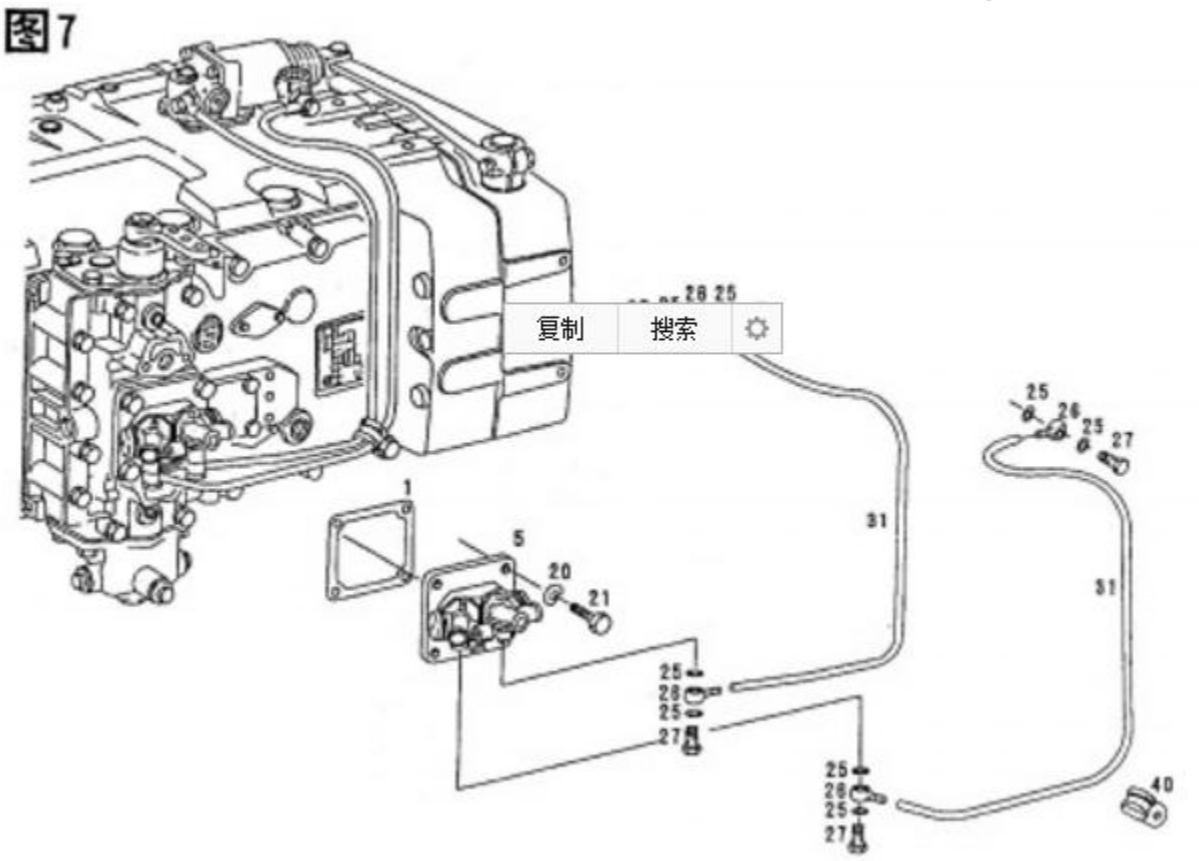

Shifting valve and air tube			
serial	number	name	quantity
1	1269307299	Gasket	1
5	750132008	Transfer valve	1
20	630302091	Wave spring washers B10	1
21	636015129	Valve bolt M10 * 35	4
25	634801205	Gasket ring A12 * 15.5	8
26	637834032	Swivel coupling R12-5	4
27	637835026	Hollow bolt A6	4
31	632702470	Air tube 8 * 15	1
40	632311228	Pipe clamp assembly	1

REAR HOUSING & ACCESSORY, ZF 5S-150GP CATALOG

图8

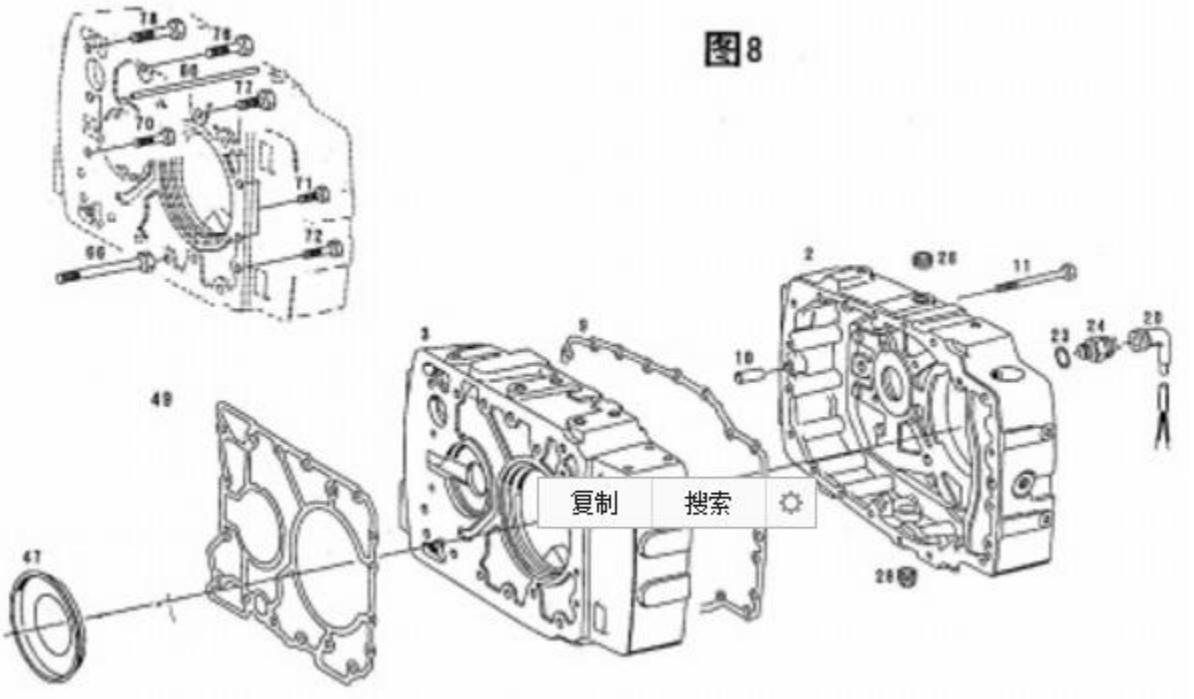

Rear housing and accessory			
serial	number	name	quantity

2	1269331037	Rear housing	1
3	2128331001	Front housing	1
9	1269331036	Rear housing gasket	1
10	731201459	Front and rear housing cylindrical pin	1
11	731201459	Bolt M10-95	1
20	6029205576	Signal Switch Connector	1
23	730150161	Gasket ring	1
24	501305443	High and low gear signal switch	1
26	736301022	Hexagon plug	1
28	736305016	Drain plug assembly M24 * 1.5	2
46	2050309034	Adjusting pads A1.25	1
47	1269304043	Former housing Oil board	1
49	1269331035	Front housing gasket	1
60	1269331024	Oil leading pipe	1
66	636104069	Hexagon head bolt	4
70	636010277	Front casing bolts M10 * 38	2
71	636015120	Front casing bolts M10 * 25	2
72	636015129	Front casing bolts M10 * 35	2
76	636011102	Front casing bolts M14 * 45	4
77	636016028	Front casing bolts M14 * 30	2
78	636011105	Front casing bolts M14 * 55	2

PLANETARY MECHANISM & OUTPUT SHAFT, 5S-150GP CATALOG

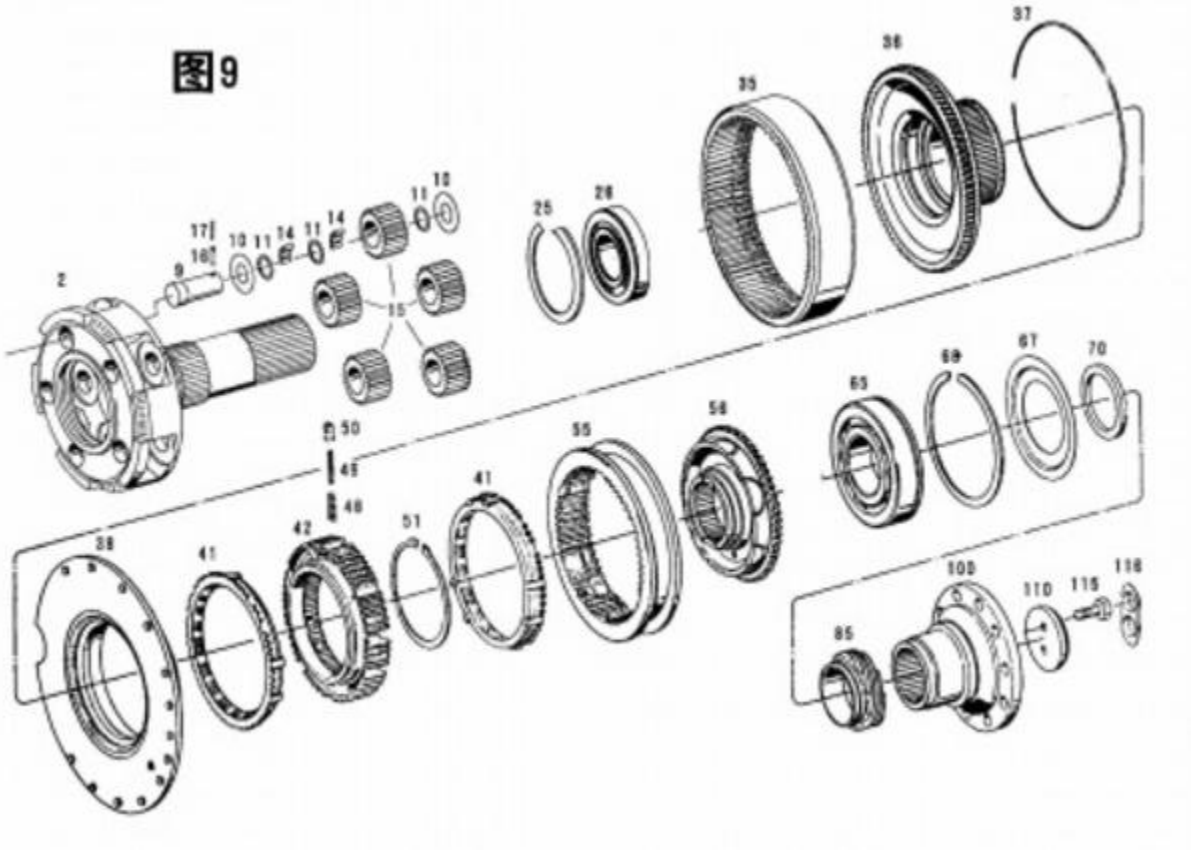

Planetary mechanism and output shaft			
serial	number	name	quantity
2	2159232001	Planetary carrier	1
9	1269332036	Planetary gear shaft	5
10	501305887	Thrust washers	1
11	703103846	Needle bearing cage	10
14	735470057	Planetary gear Needle bearing	15

15	1286298902	Planetary gear	5
16	631329048	Elastic cylindrical pin	5
17	631329016	Elastic cylindrical pin	5
25	630513010	Elastic retaining ring	1
26	635330050	Ball bearings 75 * 115 * 13	1
35	1269332055	Gear	1
36	1269332054	Bearing seat	1
37	730505053	Wire-speed ring	1
38	2159233001(B)	Support plate and synchronization cone hub assembly	1
41	2159328002	High-low gear synchronizer ring	2
42	2159333004	High-low gear synchronizer seat	1
46	732040386	Outer spring	6
49	732040385	Inner spring	6
50	1240304278	High-low gear sync push block	6
51	630501062	Elastic ring	1
55	2159333001	High-low synchronous sleeve	1
56	2159333002	High-low synchronous cone hub	1
65	635333049	Ball Bearings	1
66	630503020	Bearing snap ring	1
67	1269328096	Oil retaining pan	1
70	730160758	Spacer	1
85	1269328229	Odometer Worm	1
100	1096304011	Output flange	1
110	1240304117	Output shaft plate	1
115	636016012	Bolt	2
116	1250304353	Shaft locking plate	1

DEPUTY CASE SHIFTING MECHANISM, 5S-150GP PARTS CATALOG

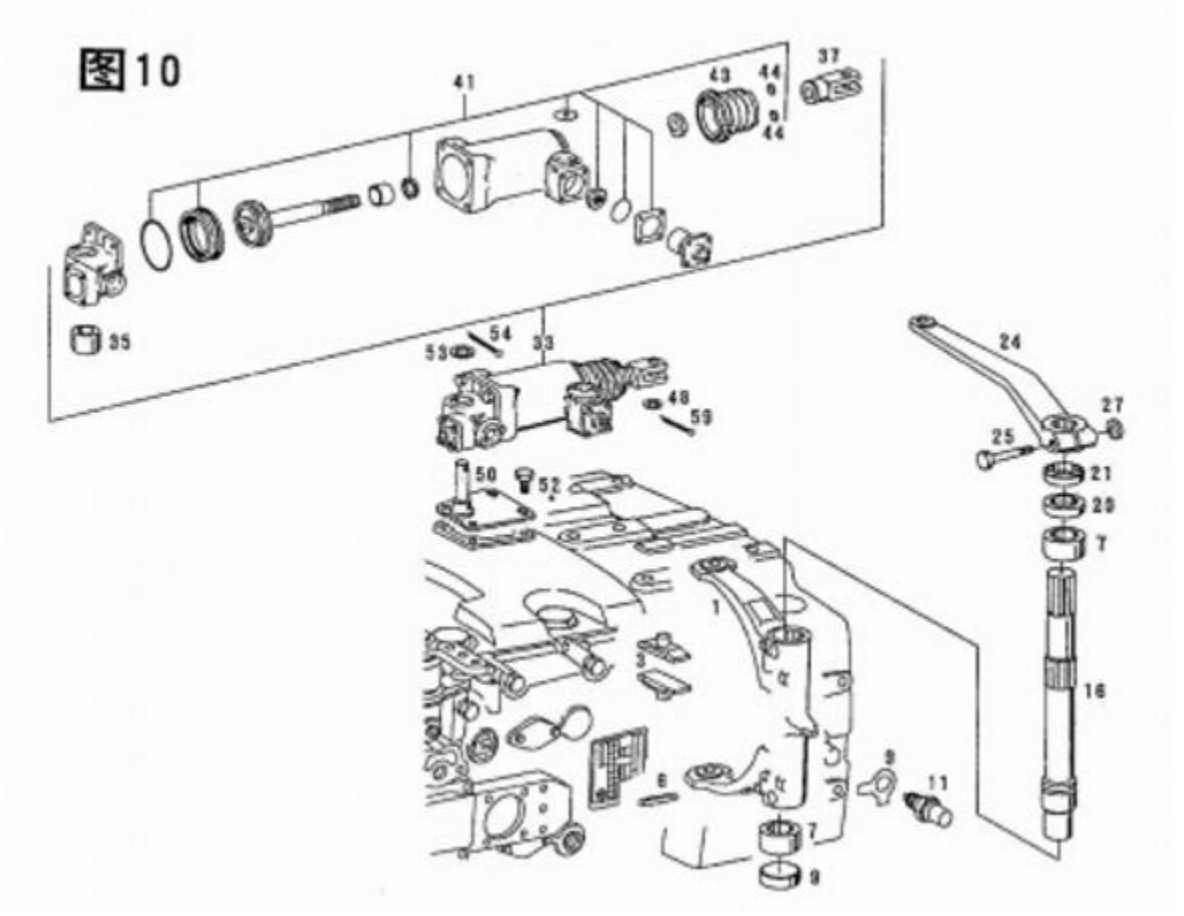

Deputy case shifting mechanism			
serial	number	name	quantity
1	2159328001	High-low shift fork	1
3	1295334027	High-low shift block	2
6	631329086	Elastic cylindrical pin	1
7	730260355	Fork shaft bushing	2
8	630361078	Seal cap	1
9	630603010	Washers	1
11	1269228045	High and low self-locking pin	1
16	1269334002	Fork shaft	1
20	634300855	Fork shaft seal 30 * 40 * 7	1
21	634307405	Fork dust seal AS30 * 40 * 7	1
24	1269328252	High-low shift rocker	1
25	636010092	High-low rocker bolt M18 * 55	1
27	637006018	High-low rocker nut M18	1
33	750132019	Shift cylinder	1
35	634308009	All belong to 33# shift cylinder	1
37	501305189		1
41	501289046		1
43	734320116		1
44	501304049		2
47	631202086		1
48	630001065	Washer A13	1
49	Q43114	Cotter pin	1
50	1229201016	Shift cylinder bearings	1
52	636015278	Bolts M18 * 16	4
53	630001052	Washers 15	1
54	631701145	Cotter pin 4 * 20	1

REAR HOUSING ASSY, 5S-150GP ZF PARTS CATALOG

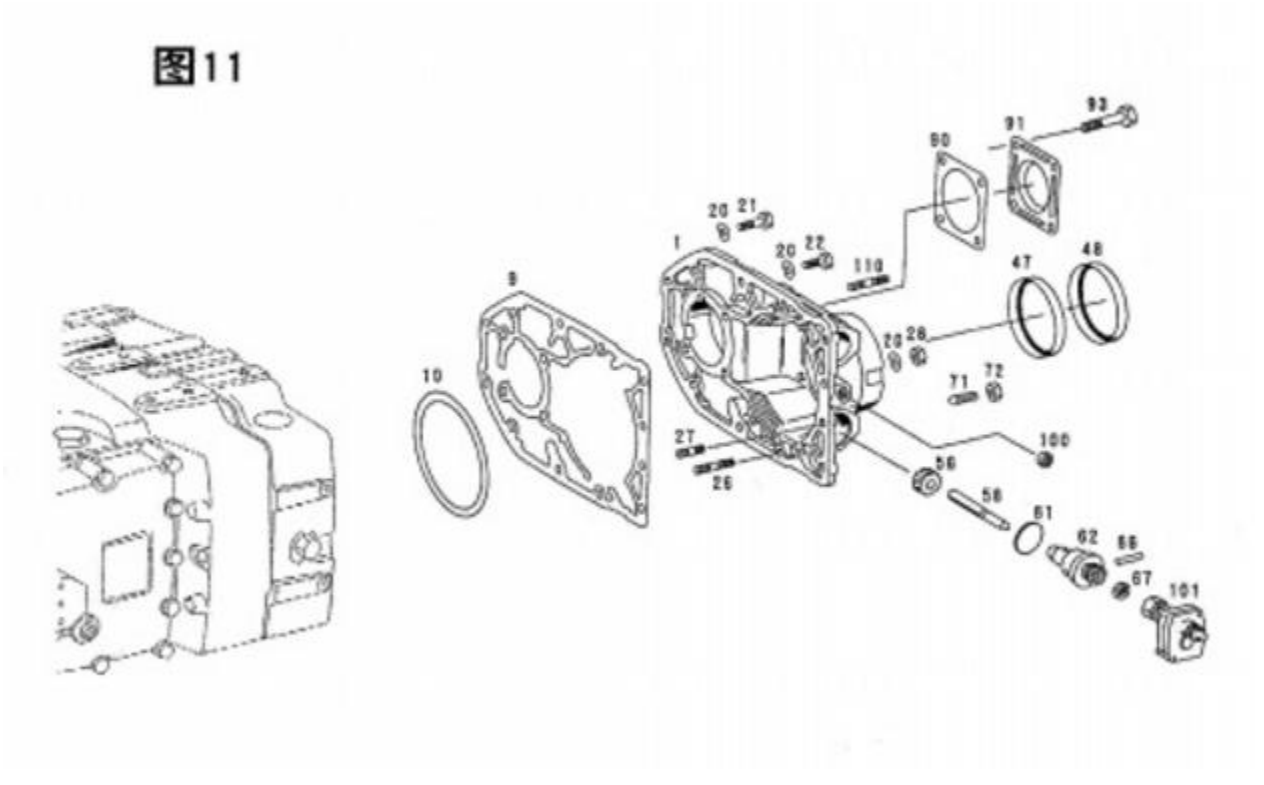

Rear housing assy			
serial	number	name	quantity
1	1269338095	Cover	1
9	1269338030	Cover gasket	1
10	1205308016	Adjusting pads A0.20	1
20	630302091	Spring washers B10	12
21	636015127	Cover bolts M10 * 30	6
22	636015114	Cover bolts M10 * 22	2
26	636610087	Cover studs M10 * 28	2
27	636610079	Cover studs M10 * 22	2
28	637006022	Cover nut M10	4
47	734310109	Output shaft inner seal	1
49	734300093	Output shaft outer seal	1
56	1250308057	Speedometer pinion gear Z = 17 (left)	1
58	1250308007	Odometer shaft	1
61	634316057	O-ring	1
62	1250308017	Odometer joints	1
66	631306713	Odometer axis positioning pins	1
57	634300185	Odometer shaft seal 10 * 15 * 3	1
71	125308131	Odometer screws	1
72	737006978	Positioning nut	1
90	1238308201	PTO hole cover gasket	1
91	1238308165	PTO hole cover	1
93	636011026	PTO hole cover bolts M12 * 20	1
100	636301048	Hexagon bolt M16 * 1.5	1
101	730101088	Odometer 2nd level transmission	1

PULL TYPE CLUTCH HOUSING, 5S-150GP CATALOG

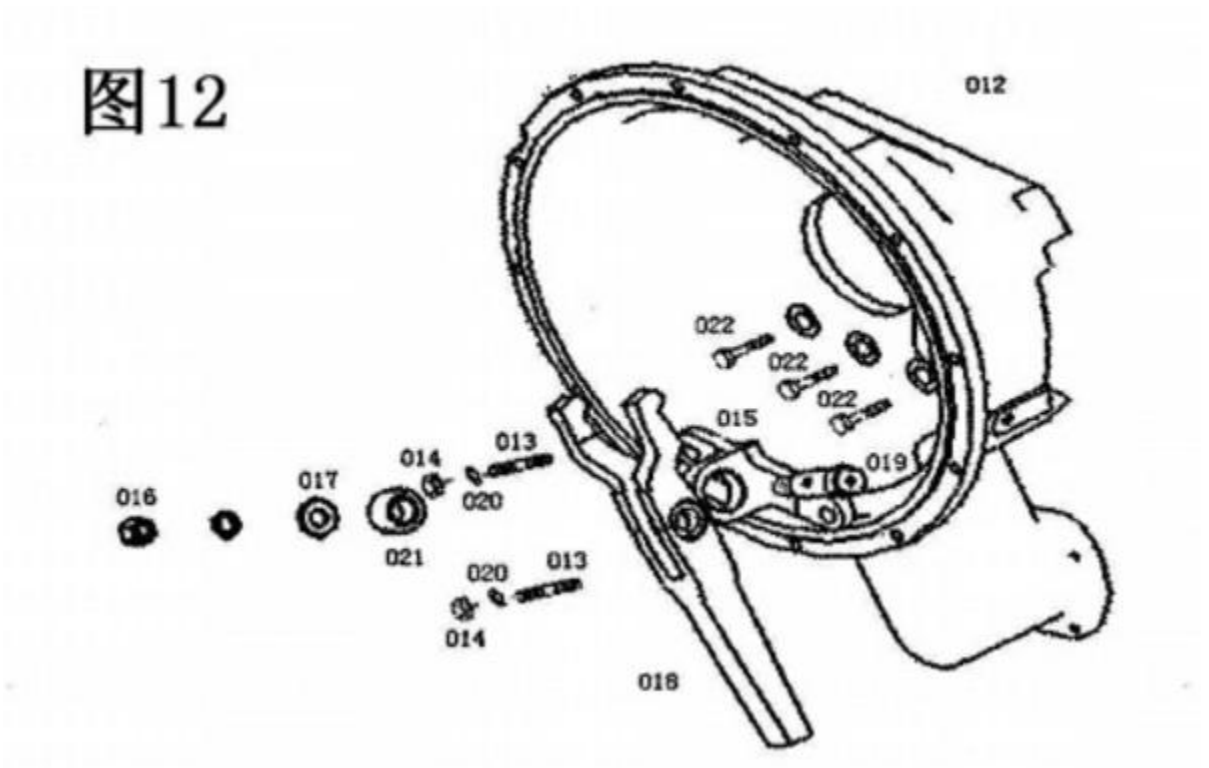

Pull type clutch housing			
serial	number	name	quantity
12	2159302008	Clutch housing	1
13	2159302021	Stud	2
14	Q341B18	Nut	2

15	2159302011	Bearing seat	1
16	Q33416	Lock nut	1
17	2159302023	Flat washers	1
18	2159302009	Separation fork	1
19	2159302019	Separation fork shaft	1
20	Q40318	Spring washer	2
21	GE25ES	Bearings	1
22	90003803943	Bolt	6

12JS200T, FAST TRANSMISSION

12JS200T Parts Catalog, Deputy gearbox driving gears, FAST Gearbox

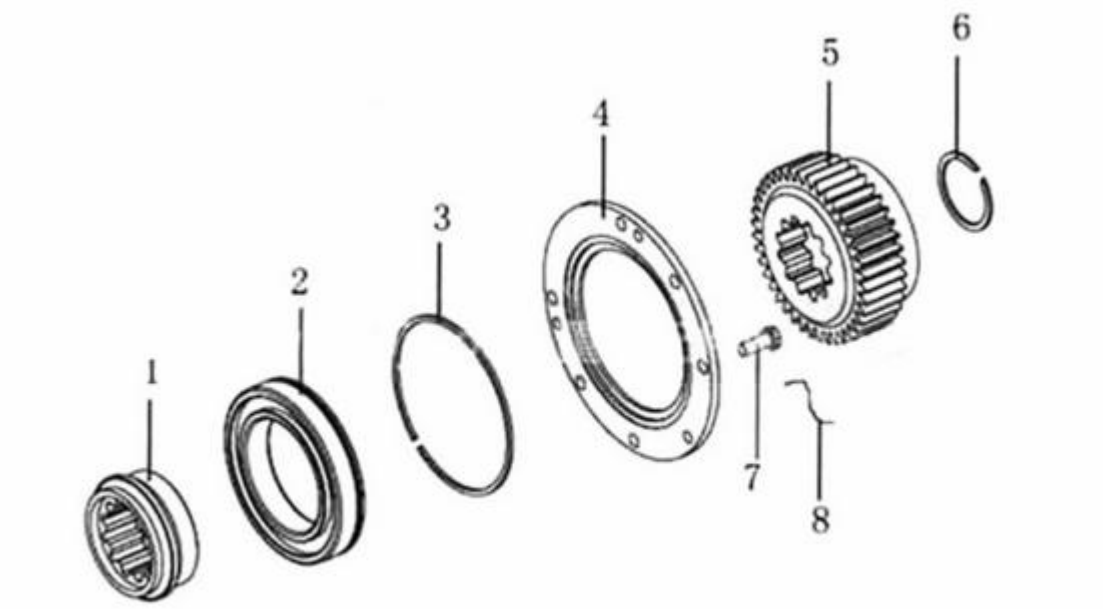

Deputy gearbox driving gears		
FAST Transmission 12JS200T		
sequence	name	part number
1	Bearing support	12jsl60t 一 1701124
2	Groove ball bearings	50118
3	Snap ring	c01019
4	Deputy gearbox bearing positioning plate	js220—1707031
5	Deputy gearbox driving gears	12js200t 一 1707030
6	Snap ring	16763
7	Hexagon head bolt	c09032
8	Iron wire	1819

12JS200T Parts Catalog, Deputy gearbox shifting cylinder, FAST Gearbox

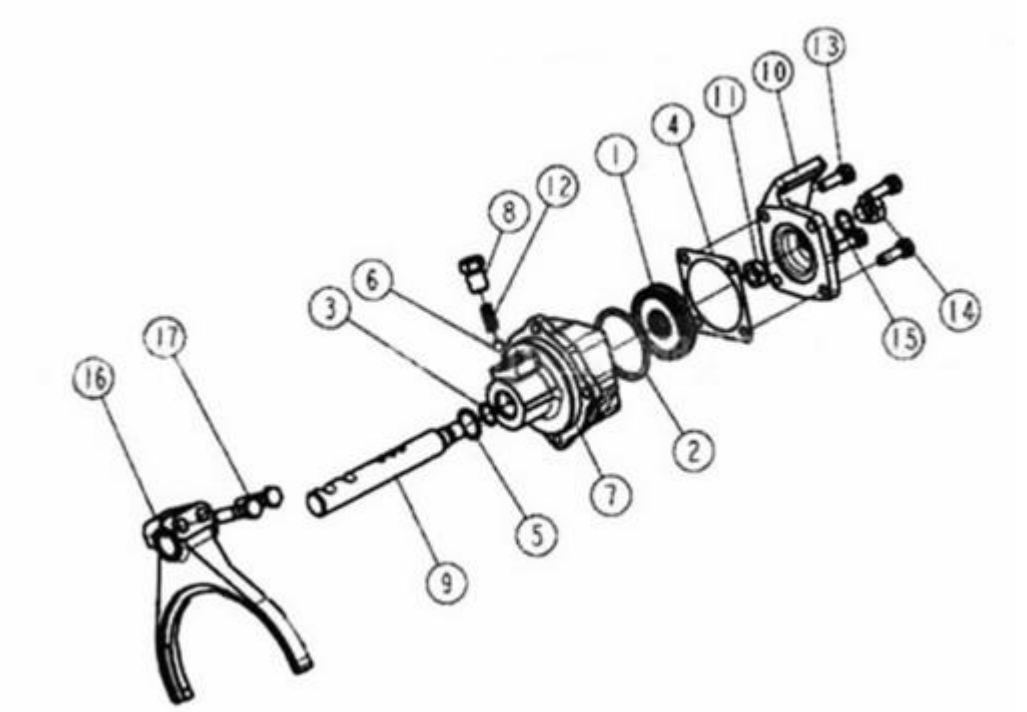

Deputy gearbox shifting cylinder		
FAST Transmission 12JS200T		
sequence	name	part number
1	Range gear cylinder piston	14341
2	0-ring	14344
3	I type sealing ring	14345
4	Cylinder head gasket	14349
5	0-ring	14765
6	Steel ball	10g100bgb—t308
7	Range gear cylinder	12jsl60t 一 1707062
8	Plugs	12jsl60t 一 1707063
9	Range gear shifting fork shaft	12jsl60t 一 1707061
10	Deputy gearbox shifting cylinder head	f99857
11	Hexagon nuts	gb890—80 一 m16x1.5
12	Positioning spring	j80—1702080
13	Hexagon head bolt	q1421032m
14	Pressure Switch	0069gs
15	Fold copper washers	x11511
16	Deputy gearbox shifting fork	16775
17	Hexagon head bolt	17181250

12JS200T Parts Catalog, Second shaft, FAST Gearbox

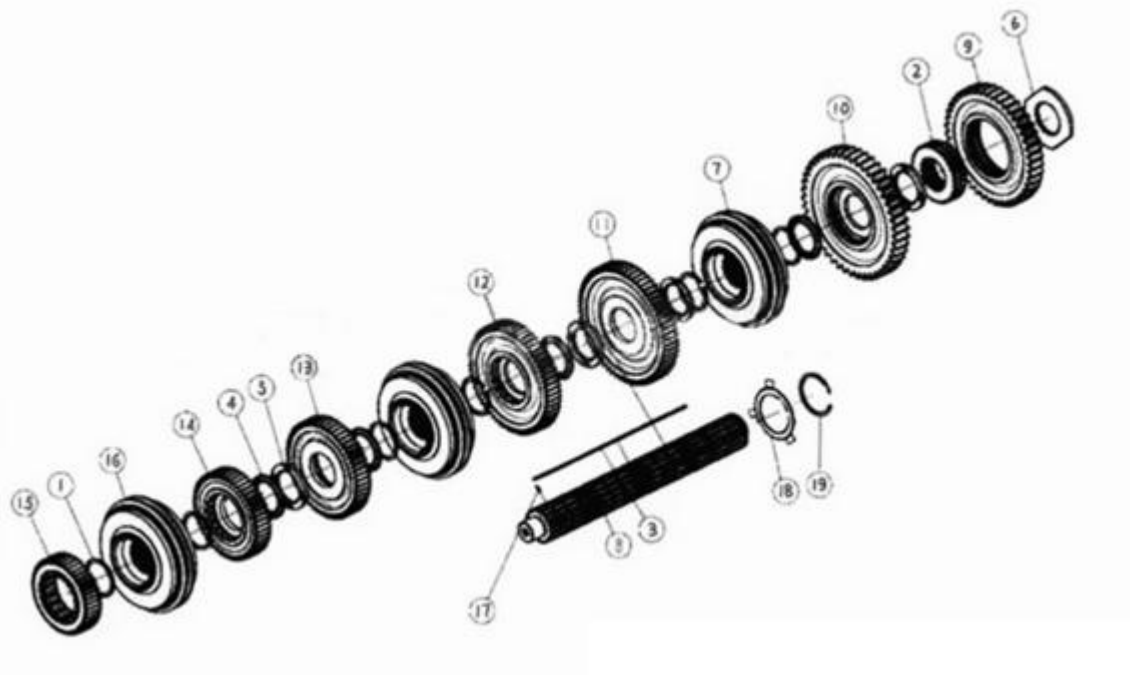

Second shaft		
FAST Transmission 12JS200T		
sequence	name	part number
1	Snap ring	16763
2	Sleeve	12jsl60t 一 1701108
3	Second shaft hex key	12jsl60t 一 1701121
4	Second shaft gear splined pad	12jsl60t 一 1701122
5	Second shaft gear spacer	12jsl60t 一 1701123
6	Second shaft reverse gear shim	12jsl60t 一 1701125
7	First & second gear synchronizer assembly	12jsl60t 一 1701170
8	Second shaft	12js200t 一 1701105
9	Second shaft reverse gear	12js200t 一 1701110
10	First gear of second shaft	12js200t-1701111
11	Second gear of second shaft	12js200t 一 1701112
12	Third gear of second shaft	12js200t 一 1701113
13	Forth gear of second shaft	12js200t 一 1701114
14	Fifth gear of second shaft	12js200t 一 1701115—1
15	First shaft gear	12js200t 一 1701116—1
16	Third & forth gear synchronizer assembly	jsl30t 一 1701180
17	Elastic cylindrical pin	q5280310
18	Spindle gear washer	12jsl60t 一 1701106
19	Reverse gear snap ring	12jsl60t 一 1701107

12JS200T Parts Catalog, Reverse idler shaft, FAST Transmission

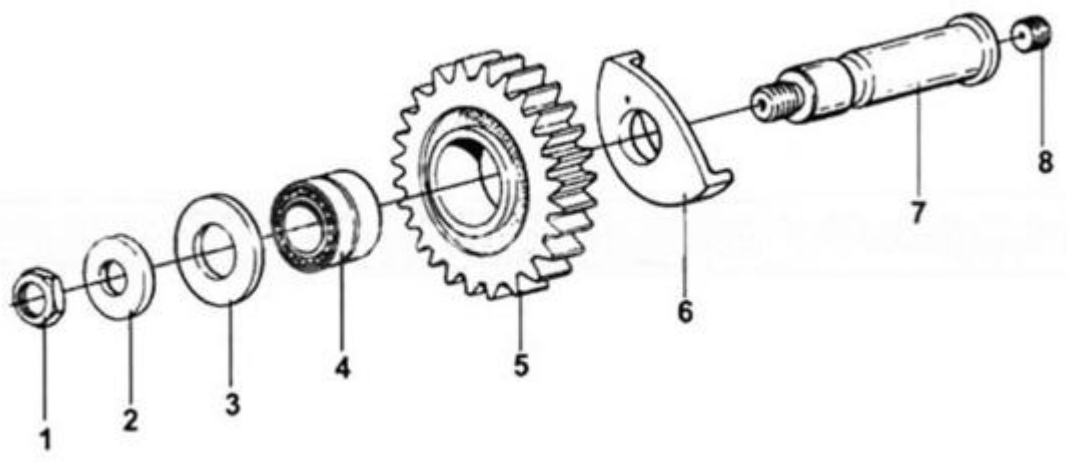

Reverse idler shaft		
FAST Transmission 12JS200T		
sequence	name	part number
1	Nuts m201.5	gb890—86
2	Reverse idler shaft washer	js220—1701088
3	Reverse thrust washer	js220—1701087
4	Needle roller bearings	dsl00—1701085
5	Reverse idler gear	12js200t 一 1701083
6	Reverse gear washer	12jsl60t 一 1701084
7	Reverse idler shaft	js220—1701082
8	Level set screws	q2821212

12JS200T Parts Catalog, Single H valve, FAST Transmission

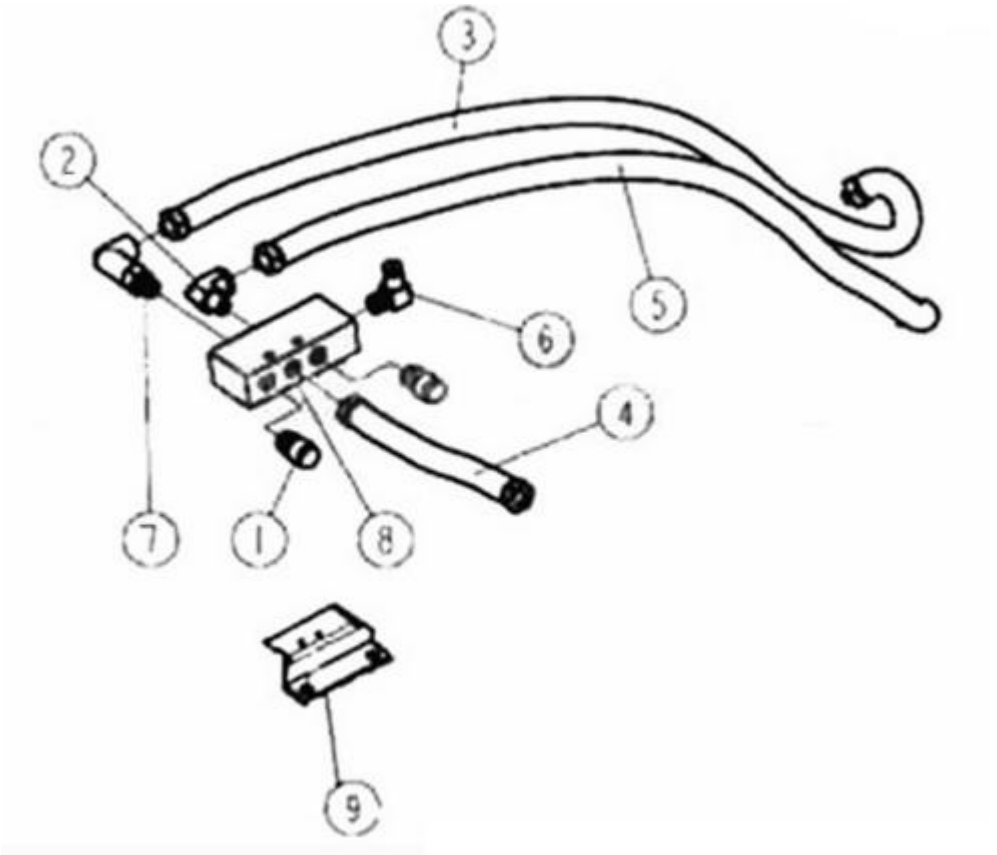

Single H valve		
FAST Transmission 12JS200T		
sequence	name	part number
1	Vent plug	7935
2	90 ° elbow joint	12845
3	Pipe assembly	55511
4	Pipe assembly	55512
5	Pipe assembly	55521
6	90 ° elbow joint	12jsl60t-1703021
7	90 ° elbow joint	12jsl60t-1703051
8	Single H valve	12jsl60t 一 1703052
9	Single H valve seat	12jsl60t 一 1702095

12JS200T Parts Catalog, Manipulation device, FAST Transmission

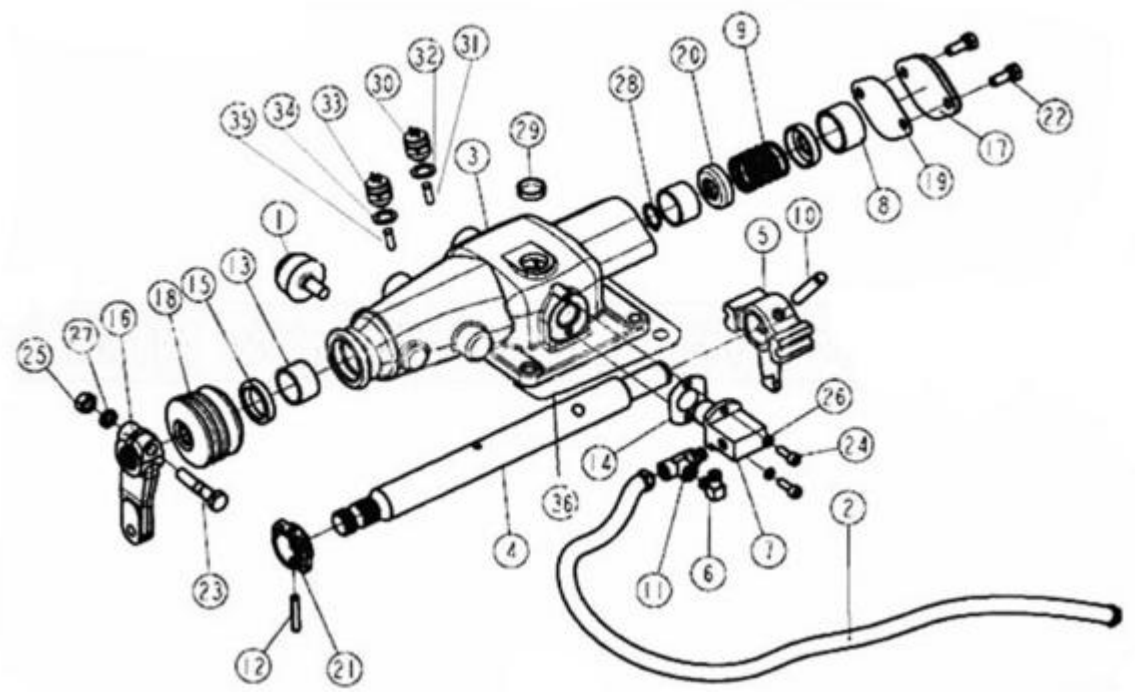

Manipulation device		
FAST Transmission 12JS200T		
sequence	name	part number
1	Vent plug	15276
2	Pipe assembly	55534
3	Manipulation device housing	12jsl60t — 1703015
4	Lateral shift lever	12jsl60t — 1703017
5	Dial head	12jsl60t — 1703018
6	90 ° shift joints	12jsl60t — 1703021
7	Pneumatic control valve	12jsl60t — 1703022
8	Limit sets	12jsl60t — 1703024
9	Compression springs	12jsl60t — 1703027
10	Cylindrical pin	c03030
11	Tee	c03052
12	Elastic cylindrical pin	c09035
13	Lateral shift lever bushing	f91345
14	Double H valve gasket	f91353
15	Seal	f91444
16	Irc external shift arm	f96035
17	Side plate	f99666—2
18	Dust cover	f99669
19	End gasket	f99672—2
20	Spring seat	f99673—1
21	Low reverse gear switch control block	f99681
22	Hexagon head bolt and spring washer assemblies	q1420822
23	Hexagon head bolt	q151b1050
24	Hexagon socket head cap screws	q218b0618
25	I Type hex nut	q341b10
26	Spring washer	q40306
27	Spring washer	q40310
28	Shaft circlip	q43120
29	Bowl stuffed pieces	q72224
30	Pressure Switch	0041ks

Manipulation device		
31	Switch starting pin	f99702
32	Gasket	q72318t3
33	Pressure Switch	0068ds
34	Gasket ring	c03015
35	Switch starting pin	15899
36	Manipulate liner	1642